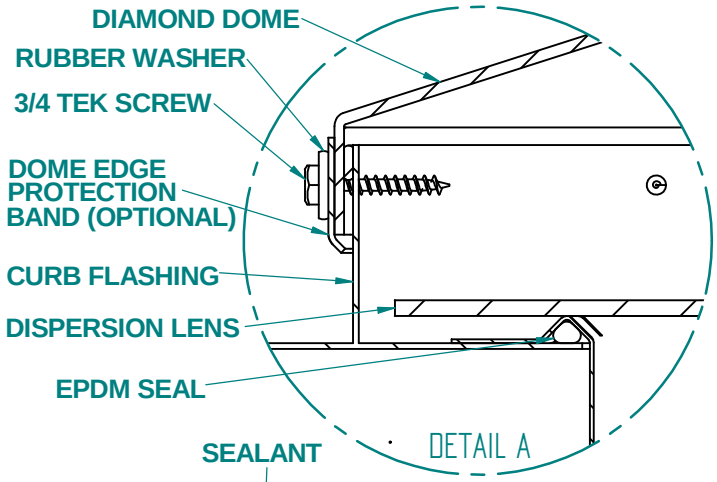

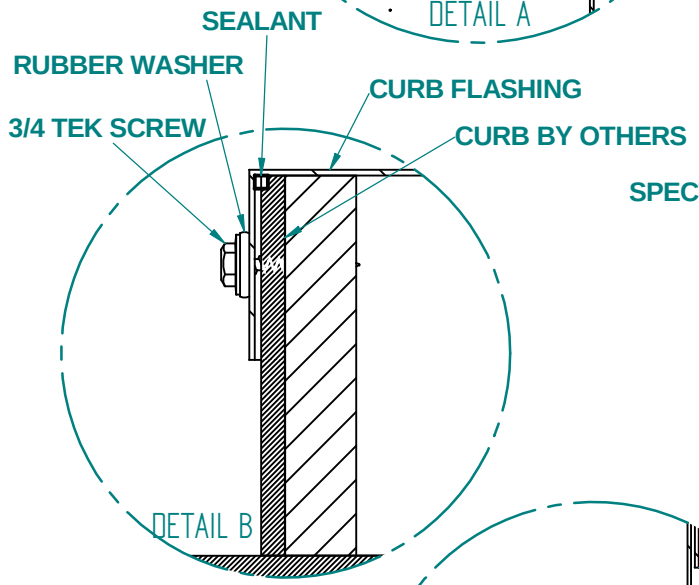

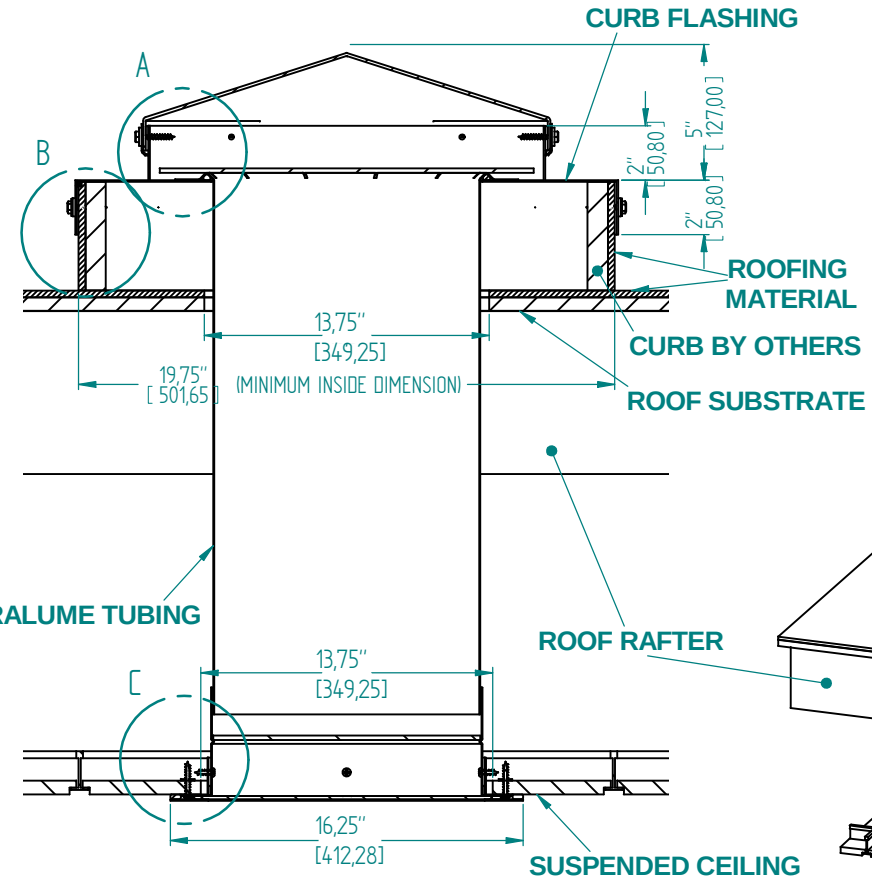

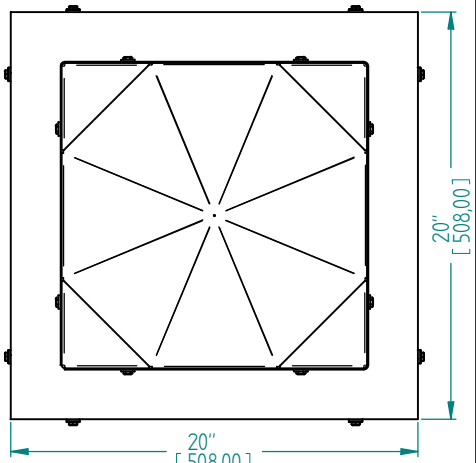

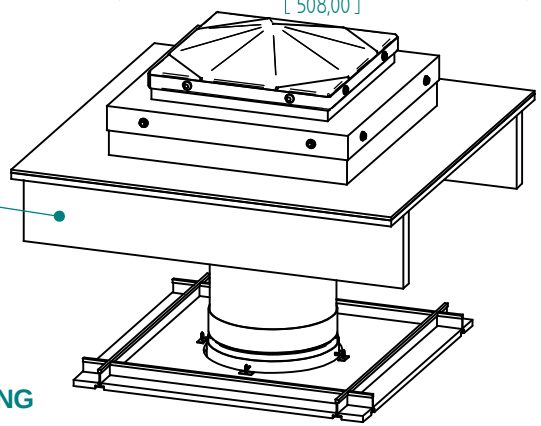

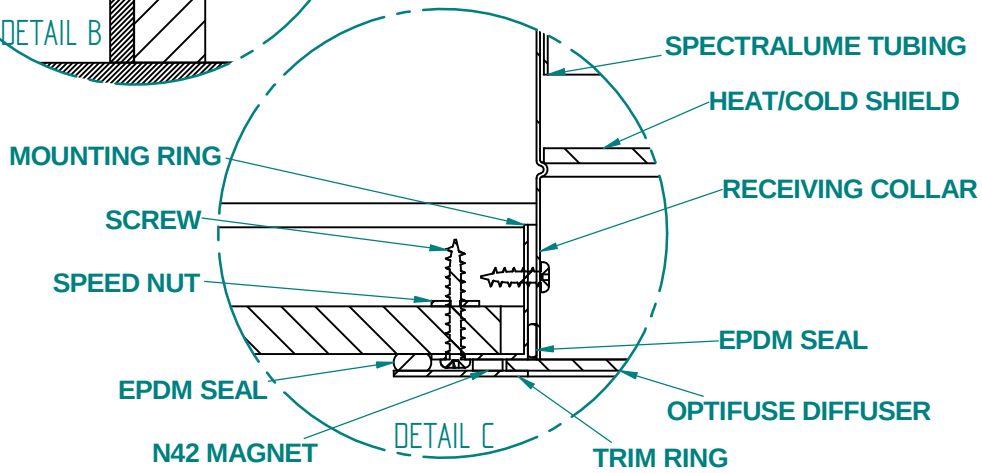

NOTES:

1. STRUCTURAL ELEMENTS (RAFTERS ETC.) BY OTHERS, SHOWN FOR REFERENCE ONLY.
2. ALL TUBE JOINTS & SEAMS TAPED WITH 2" FOIL TAPE (NOT SHOWN).
3. DIMENSIONS IN BRACKETS ARE METRIC (mm) UNLESS OTHERWISE SPECIFIED.
4. SHOULD BE MAINTAINED WITH SUN GLO COMPONENTS.

REV		DRAWN	DATE

SUN GLO® SUNGLO.BIZ

4111 CITRUS AVE STE 1
ROCKLIN, CA. 95677
916-630-8782

TITLE : CURB CAP SUSPENDED CEILING FOR 14" TDD

DRAWN	DONOVAN PENALUNA
DATE	08/06/2015
APPROVED	
SCALE	1:5
PAGE : 1	OF 1
DRG No : SG-14-CC-SC	1st ANGLE PROJECTION